The Focus

June 18, 2010 | A Publication for ANSYS Users | Issue 74

Instead of using cheesy graphics with money bags, scales, and overly attractive "employees" in meetings, we decided to dress up this article with pictures from around Arizona. This is from the top of Four Peaks, the mountains east of Phoenix.

Maximizing the ROI on your CAE Investment

By Eric Miller

If you are reading this article you are either a practitioner of Computer Aided Engineering or you are stuck on a desert island and this is the only thing you have to read. Let's assume the former. If you boil down why your company does CAE, you should come to one or both of the following reasons: to reduce your costs for physical prototyping and/or to increase the number of design iterations through the use of virtual prototypes. Study after study, even ones not paid for by CAE software companies, show that leading companies use more CAE, earlier in the design cycle. Figure 1 shows the results of one such study from the Aberdeen Group.

You may be new to CAE, or a 20+ year user. Either way, how does your company maximize the return from their investment in you, your co-workers, the software and the hardware? And do not forget that annual maintenance fee you pay. PADT's internal experience and lessons learned from our customers, leads us to recommend that the best way to get the most out of that investment *(Cont. on pg. 2)*

Issue 74, the Last "Magazine" Style Issue of The Focus

It is hard to believe that the next issue of The Focus will be the 75th! We hope you have enjoyed reading it as much as we have enjoyed making it. As we prepared this issue we came to the realization that this format has served its purpose and that various Internet based publishing tools have matured to the point where it is time to make a change. We are leaning towards more of a blog approach where we put out single articles once every other week or so, instead of the big issue.

So look for a lot of changes to how we publish and distribute The Focus in the coming months. And thank you again for everyone's continued support of this publication!

In this Issue...

You do an article on crack modeling, and you have to go with the classic "fat guys on a stool" pictures. No Choice.

Part 2
Modeling Cracks with ANSYS

ANSYS supports several of the common techniques used to analyze cracks. In a typical first analysis, an engineer assumes a flaw shape and size and then uses the stress results from an FEA model as input into NASGRO. If a more detailed simulation is required, an FEA model with a crack included can be created.

There are a few guidelines for using ANSYS to model cracks, the guidelines will be demonstrated through an example of a steel turbine wheel, shown in Figure 1, which has been assumed to have a crack introduced during the balancing process. A link to the geometry model (v12 UP20090415) and APDL command files are provided at the end of this article in order to allow the user to reproduce this analysis step by step. *(Cont. on pg. 7)*

(ROI, Cont...)

is to focus on four key aspects of CAE: goals, people, tools, and process. In this article we will talk about each and how to make each aspect work for you.

A picture from Sedona looking up to the Red Rocks. Notice the reflection in the pool. This is a required shot for all visitors to Sedona.

Goals

If you have every read an article or attended a seminar hosted by PADT on being more efficient/productive you will always hear us start off with goals. We feel that a lack of clear goals is a huge productivity killer. We find again and again that companies or teams that successfully use CAE have clear goals for their entire CAE effort. Goals that they develop, document, and modify as needed. As an example, PADT's CAE goal is: To answer questions raised in product development in the most cost effective manner with the proper level of accuracy and detail. It may not roll of the tongue but it gets the job done and helps keep us from going off track.

Just as every organization should have goals for their total CAE effort, they should also get into the habit of forming goals for each CAE task they undertake. This does not need to be formal but should at least address what you want from the calculations you are doing and how accurate they need to be. You should write them out, kind of like a customer specification and they should never be longer than one sentence. Once they are written down they can help the engineers involved in the middle of the project, and will help new engineers understand why they are doing the CAE tasks that they have been assigned. Example task goals could be:

- Determine cooling hole size and distribution to obtain required wafer cool down in between 45 and 60 seconds
- Report LCF and HCF life based upon customer supplied loading specification
- Modify antenna design to minimize material costs and meet signal strength requirements in ES 123.31
- Determine min, max and average percent enobarnotopital to provide a between 95% and 99% probanotinaium yield

If the tasks are part of a major effort, it might not be a bad idea to review them weekly. Making goal setting and review part of your CAE culture can have a huge impact — keeping projects on focus, under budget and most importantly, delivering the information that the design team actually wants.

Oak Creek Canyon is one of the green oases that we go nuts for here. People back east have this sort of thing in their backyard but for us it is a big deal.

People

It is hard to understate the importance of people in making a CAE effort a success, a failure, or just so-so. From key super users to engineers who are in over their heads, people are the most important aspect of getting the most out of your CAE investment. They are also the hardest to control.

Dig deep into companies that are true CAE superstars — time and time again you will find one or more key users. Some call them gurus, some are called power users, and still others are simply referred to as simulation gods. We prefer the less charged term "key users." They prove that one person can make a difference by pushing technology and applying it properly. They also help management make smart tool decisions. Most importantly they mentor, train, and serve as examples for the other users in the organization. Sometimes these key users are simply users, sometimes they are managers or members of methods teams. Regardless of where they come from they share some common characteristics:

- Balance between theory and practical
- Creative, willing to experiment and try different ways
- Fast thinkers
- Obsessed with efficiency
- Learn things quickly with minimal input
- Good at programming/scripting
- Involved in real world applications
- Strong computer skills

If you are a key user, embrace it and work to help make your organization better. If you are a manager or user who sees the need, work to grow key users by identifying them and encouraging them to take on a strong role. Then focus on keeping them engaged in key activities and decisions. Doing so will be one of the best investments any organization can make.

(Cont. on pg. 3)

(ROI, Cont...)

On the other end of the spectrum, and just as powerful, is the anti-particle to the key user — the bad user. We would like to live in a world where "everyone gets a trophy" but in the real world some people should not be involved in computer aided engineering. A few are bad users by nature. They are generally too practical or too theoretical. They also do not remember steps in a process or have a lack of concern about speed. Lastly they are often not computer experts and get stuck a lot, struggling with solving problems independently. The key thing is to find people like this and take them out of CAE. There are plenty of other engineering tasks out there that may be a better fit for this type of person.

Up in Northern Arizona on the Navajo Nation there are these incredible slot canyons. Cut by wind and water, the way the light shines down is incredible.

However, the more common bad user is not bad by nature, they are bad by nurture. A perfectly capable engineer can do a rotten job at CAE because their company did not use them properly. Typical problems are not enough training, spreading them too thin or not giving them the compute horsepower they need. It is also common to not allow them to do CAE often enough to be good at it. Even if those problems do not exist you can get bad results by giving people unreasonable schedules, unrealistic expectations or punishing them for delivering bad news. The good thing about someone who is a bad user because of external influence is that you can flip them into being a good user by removing the negative parts of their environment.

In talking about key users and bad users, we have left out the largest group of users - the mainstream day to day engineers who do the bulk of the CAE work. Because they are the largest group, it is important to remain focused on them. Make sure your organization maximizes your considerable investment in them by making some key commitments like giving them the proper hardware and software that they need. Then provide them the time to learn those tools, clear goals, and encouraging them to work together and share their knowledge and skill.

In short, focus on your people and they will deliver for you. Encourage the truly capable and nurture the average users. And do not be afraid to move those who are not a good match for CAE out of the area.

Tools

When people think about CAE, most of the time they focus on tools. Hardware and software are cool, always getting better and fun to evaluate. But, they also cost a bit so companies need to be smart about how they choose and use their CAE tools.

It is obvious that hardware tools (computers) are an essential part of CAE. Even though this is obvious, many companies often make horrible mistakes in choosing and setting up their hardware. Users end up with machines that struggle to solve their problems. A major cause of this is IT departments that have no understanding of CAE. It is up to your CAE team to educate them to recognize that your needs are different. And eventually convince them to proactively help you.

When purchasing hardware for running numerical simulations it is important to make the right decisions. The most important is to make sure you have more speed, memory and disk storage than you think you will need. This is because no matter how much you think you need, you will need more. Saving a few hundred, or even thousand dollars on a computer can end up costing your company tens if not hundreds of thousands in schedule delays or reduced accuracy. Along those lines, it is also important to not get too hung *(Cont. on pg. 4)*

(ROI, Cont...)

up just on speed. Often times capacity is more important than raw compute speed. Look at the overall time it takes to run jobs including file transfers, I/O to disk, being able to run in core and actual CPU speed.

You can't show pictures of Arizona without one of our spectacular sunsets

In larger organizations PADT recommends a tiered approach to hardware: good large desktops, departmental servers for medium sized jobs and a corporate cluster if you need to solve lots of problems or big ones. This gives your team greater flexibility and provides the right machine for different jobs. Another suggestion is to work closely with your IT department to make sure they understand that you cannot use a "standard build." We see many of our customers hamstrung by the fact that they can only get a machine that is a PLM or CAD standard box and it does not have the RAM or disk capacity needed for their analysis.

Software for CAE is the one area the usually gets a lot of focus, and it deserves it. But not just for the CAE software itself. It is important to also focus on utility software that leverages your CAE software and makes your users more productive. As an example, we recommend that all CAE users have access to a CAD tool or some sort of geometry translate/repair tool. Often times the tool imbedded in your CAE software is not powerful enough and waiting on someone from the CAD group can kill a schedule.

Other utility software that every user should have include:

- MS Office - do not waste time trying to get some other office tool to work. Just suck it up, pay Microsoft their blood money, and be productive
- Text Editor - Invest in a good text editor for looking at output files, writing scripts, and viewing text information. These don't cost much and getting a nice one can save hours every month.
- Image Editor - Making pretty pictures is a large part of a CAE user's time. Not having a good image tool can waste hours in non-value added fiddling trying to get pictures just right. Get PaintShop Pro, Photoshop, Gimp or some other tool and learn how to use it.
- Virtual Meeting Tool - Share your data easily and quickly with your customers, support provider and co-workers with a tool like WebEx, iLinc, or go2Meeting
- Linux Shell on Windows, Virtual Windows on Linux - If you have a multi-OS environment, invest in emulators so you are not always working around the system.

Process

Last but certainly not least is process. One of the problems with CAE is that there are so many different ways to solve a problem, and they all involve detailed steps so it is easy to lose your way. Taking the time to establish standard processes can avoid reinventing the wheel. They keep users on task, allow productivity gains to be captured, and provide a great guide to new or occasional users. The most important benefit of having well documented process is the repeatability of the work.

Like a lot of good things, an organization can go way overboard in this area. Processes need to be flexible and adaptable to real world circumstances. Our experience is that if a company has rigid processes, engineers often "go rogue" simply out of spite. A good compromise is to standardize the steps in the ideal process in detail, and give guidelines for the overall process. This allows users to reuse what applies and adapt as needed. That same experience has taught us one more thing about the effective use of processes - they are most effective in companies where a person who is reasonable but strong willed is given the authority to collect, maintain and enforce processes.

General Recommendations

These four areas of focus should help any organization that uses CAE be more efficient and get more value from their CAE investment. Think: GOALS, PEOPLE, TOOLS, PROCESS and try and not focus on the minute details of applying CAE. Also, try and focus on the things you can change. Goals are the easiest but if you can make changes to your people, that may deliver the best results. Try and get your whole organization, users, project engineers, management, thinking about CAE as a tool instead of as a black box or a magic bullet.

Another recommendation that we have seen generate good results is to build a positive relationship with your IT team. We have seen companies that fight with their IT, get nowhere, and end up not having the compute resources they need to be efficient. *(Cont. on pg. 5)*

The Focus is a periodic publication of Phoenix Analysis & Design Technologies (PADT). Its goal is to educate and entertain the worldwide ANSYS user community. More information on this publication can be found at: http://www.padtinc.com/epubs/focus/about

(ROI, Cont...)

And when something goes wrong it takes forever to get back on track. Take the time to work with IT, letting them know what you plan on doing way ahead of time. Also, take the time to understand what they do. If you can do these things and build a strong personal relationship with them and maybe even help them out every once in a while, you will get greater efficiency and less down time.

A similar recommendation is to get to know your internal and external technical support providers and build a good relationship with them. Recognize the fact that providing tech support is a hard job with little thanks. If you go out of your way to appreciate what they do for you, the result will be an extra effort from the support provider to make you successful. Lastly, do not cheap out, pay your maintenance fees.

This is a place called Boulder Canyon. It is a fairly typical desert canyon with stunning rocks and endless vistas.

The last recommendation that PADT usually makes is the hardest to make happen. In company after company we see people using the wrong tools, using tools in the wrong way, and wasting time on arguing about tools because some of the engineers get "religious" about their CAE tools. They need to remember that they are engineers doing calculations to solve problems, not ANSYS or NASTRAN jockeys. To stretch the analogy even further, when you start having faith in your tools, it is time for a reality check. A healthy dose of skepticism is important to making sure you get the most out of your CAE investment.

Next Steps

The first step in maximizing your ROI in CAE is to first recognize that you need to do things to maximize it. The next step is to identify your goals and document them. Work on getting the proper people involved and make sure you have the right tools and your users know how to use them. Then identify and document some flexible processes.

Looking at this as a bigger picture, the key aspect turns out to be changing the way your company thinks about CAE. In every area listed above it really boils down to not treating simulation as a black box but as a powerful tool that needs to be used properly by the proper people. Once you make this change, work on getting your organization to understand the value of CAE and to treat it as a strategic asset. When you look back on the efforts you have made to improve your use of CAE, the biggest change you should see is that you are now driving most of your designs efficiently and accurately with simulation.

Thin Sweep: Sweeping Away Sweep Mesh Restrictions

By Jeff Strain

For many versions, ANSYS users have had the ability to sweep mesh extrudable volumes in both ANSYS "classic" Mechanical APDL and Workbench Simulation Mechanical. However, there was one big caveat: there could only be a single source face (the face from

(Cont. on pg. 6)

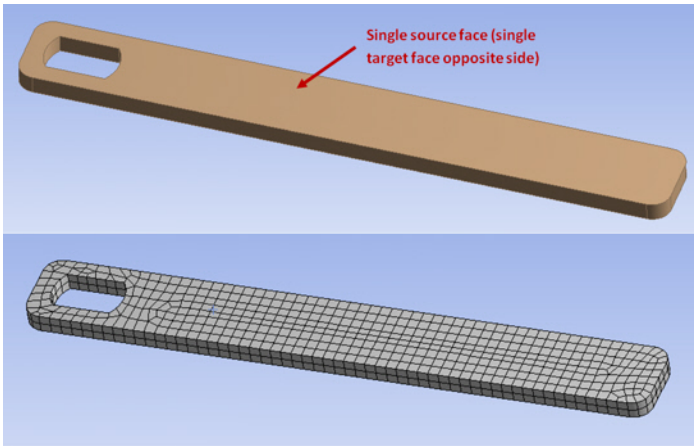

Figure 1: Your Typical Sweep Mesh - Single Face Source, Single Face Target

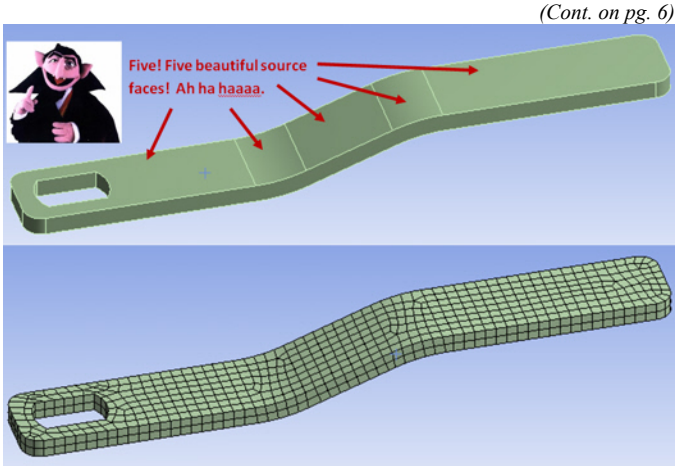

Figure 2 Bwuh?? How'd he do dat?

(Thin Sweep, Cont...)

which the mesh is swept) and a single target face as in Figure 1 (the face to which the mesh is swept).

But wait! What if I told you that, in Workbench Mechanical, you can sweep mesh an extrudable volume having multiple source and target faces (Figure 2)?

The trick to this, my friends, lies under the Src/Trg Selection options within the Sweep Method mesh object.

The first thing you want to do is insert a Method object under the Mesh branch (Figure 3).

Select the geometry to be meshed and set "Method" to "Sweep" in the Details window (Figure 4). Now for the magic. From the "Src/Trg Selection" pull-down menu, select either "Automatic Thin" or "Manual Thin." If you select the "Manual Thin" option, you'll also have to select the source faces. The "Automatic Thin" option allows the Workbench mesher to figure it out on its own (Figure 5).

It's also a good idea to specify the number of element divisions through the sweep mesh. My experience has been that, even with the number of divisions set to "Default," I still get just a single element through the sweep unless I set it manually, regardless of global element size (Figure 6).

Once you specify these settings and generate the mesh, you end up with a beautiful sweep mesh as shown previously in Figure 2 (assuming, of course, you've applied these specifications to an extrudable volume).

Now, you may be asking me telepathically from your desk, what element type do you get with this "thin sweep" option, at least with a structural analysis? Are they SOLID186s? SOLSH190s? Writing out an ANSYS input file, bringing it into Mechanical APDL, and listing the element types give us our answer (Figure 7).

Figure 7 They're SOLID186s: Your Typical Workbench Structural Brick Elements

For a thermal analysis, thin sweep meshing produces SOLID90s which, again is consistent with a standard thermal brick mesh.

Interested in learning about other Workbench tricks? Consider taking our Introduction to Workbench Mechanical course, prepared by ANSYS users (i.e. your friendly neighborhood PADT engineers) for ANSYS users.

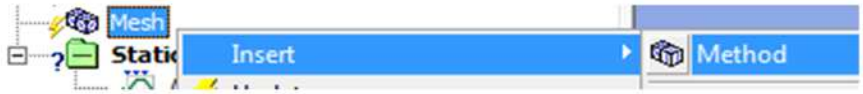

Figure 3 Right-Click Mesh Object > Insert > Method

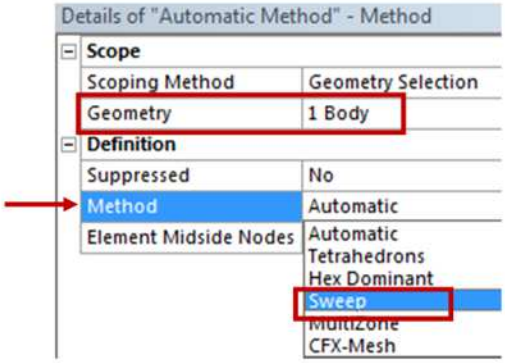

Figure 4: Sweep Method Specification

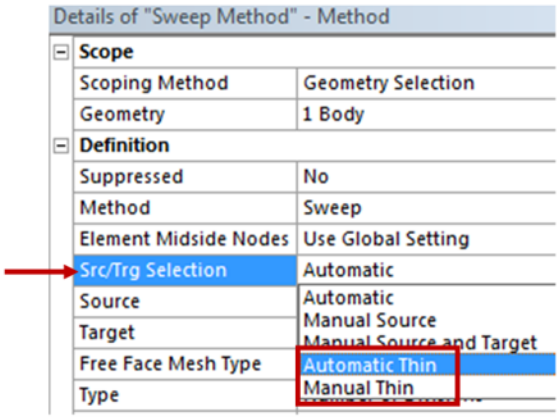

Figure 5: Thin Option for Source/Target Selection

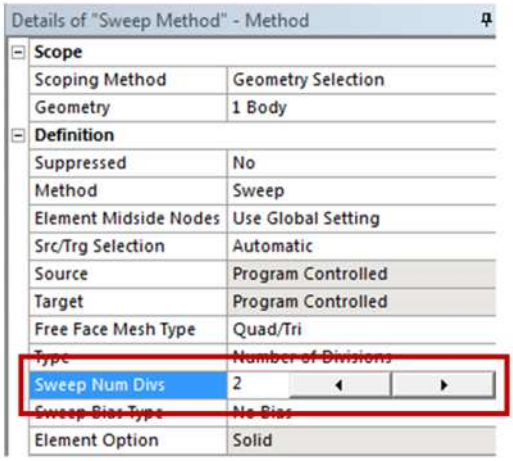

Figure 6: Setting the Number of Sweep Divisions

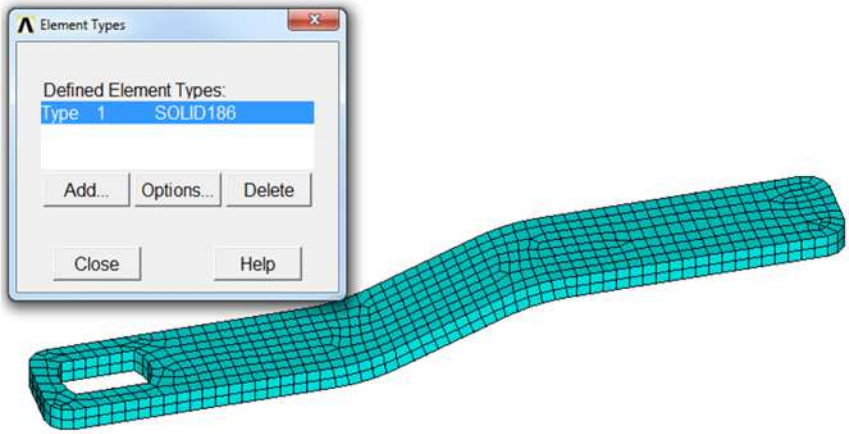

Figure 7: They're SOLID186's - Your Typical Workbench Structural Brick Elements

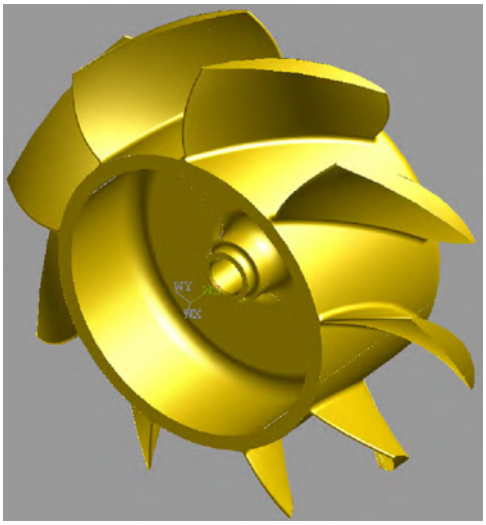

Figure 1: Fictitious Turbine Wheel Analyzed

(Crack, Cont...)

Part 1 of this article in the previous issue of The Focus covered the use of KCALC and the steps used to prepare a mesh for its use. Recent versions of ANSYS have added commands to simplify the process. Refer to Part 1 for details of the model creation. The meshing scheme is similar with the exception that we use solid186 and solid187 instead of solid95 and solid92.

Figure 2 shows the mesh, note that the wedge elements at the crack tip need to have the midside nodes moved to the 1/4 radius location. This creates the stress singularity needed to properly model the stress distribution seen in a crack front.

A baseline model was first run without a crack. The S1 result from that run is shown in Figure 3. Maximum S1 shown is equal to 28.4 ksi.

The model was then run with a 0.020in deep crack. Maximum S1 shown in Figure 4 is equal to 79.6 ksi.

Issue CINT,TYPE,JINT prior to solution for ANSYS to calculate the J-integrals. If you issues a CINT,TYPE,SIFS prior to solution, ANSYS will calculate the Stress Intensity Factors (K1, etc).

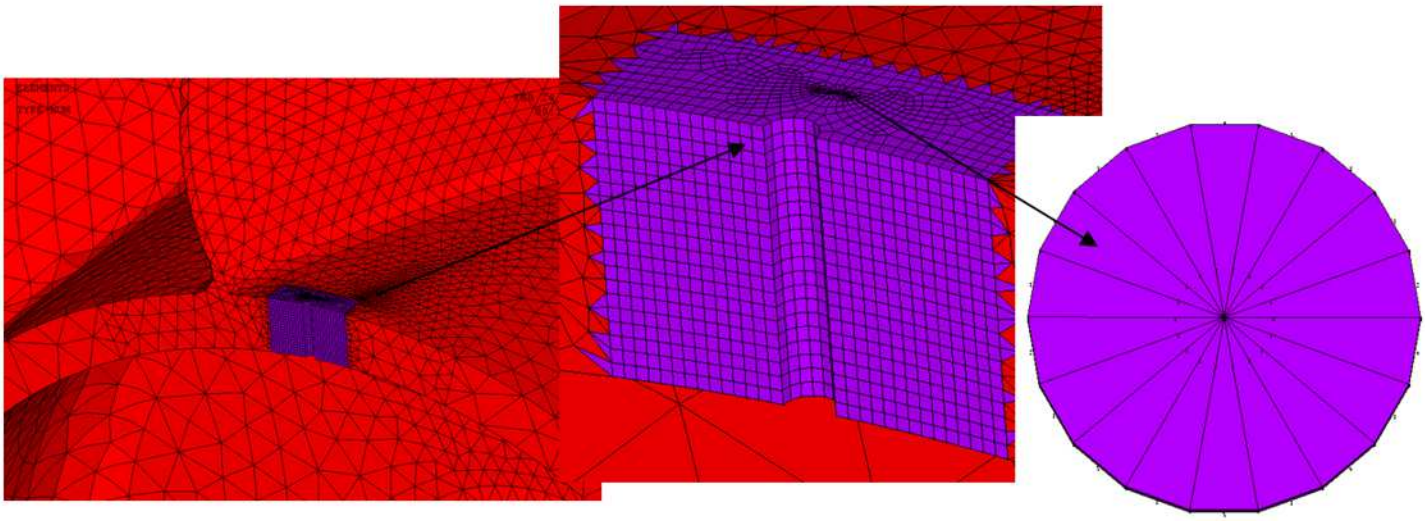

Figure 2: Meshed model, red=solid187, purple=solid186, elements at the crack tip have the midside nodes

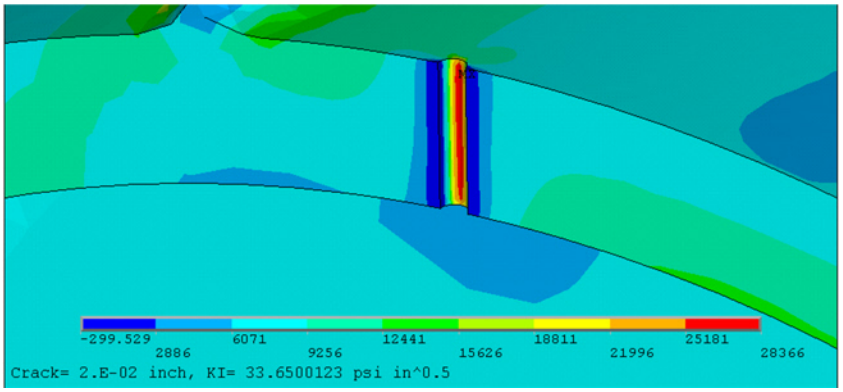

Figure 3: S1 plot of the model without a crack

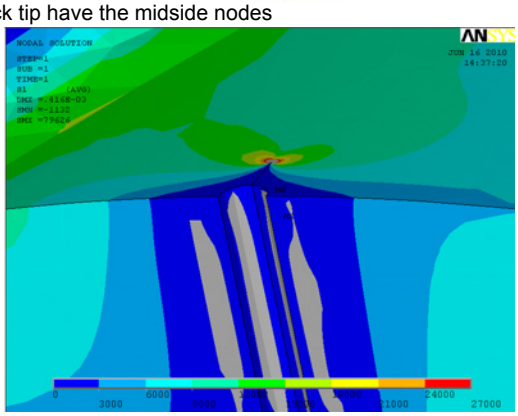

Figure 4: S1 plots of the model with a 0.020in crack

CINT,TYPE,JINT

Once the model has been solved, the J-integral can be listed in POST1 using the PRCINT command. One advantage of using PRCINT instead of KCALC is that you no longer need to identify the path used. ANSYS calculates the J-integral for all of the nodes identified in the CINT,CTNC command. Partial results of PRCINT are shown in Figure 5. This example used 6 contours (CINT,NCON,6) so there are 6 values calculated. Each contour represents a calculation including that "number of rings of elements". In other words, contour number 3 includes 3 rings of elements when integrating the path around the crack.

```
***** POST1 J-INTEGRAL   RESULT LISTING *****

 CrackID =   1

  Crack Front Node =    1
   Contour Values =  -0.30452     -0.30426     -0.30452     -0.30446
   Contour Values =  -0.30436     -0.30424

  Crack Front Node =   56
   Contour Values =  -0.29170     -0.32318     -0.32376     -0.32400
```

Figure 5: PRCINT,1 output, results for the first 2 nodes shown.

J integral values can be used for a variety of analysis purposes. One of them is calculating KI which can be done like this:

```
K=(30E6/(1-(0.29*0.29))*ABS(J1))**0.5        ! WHERE E=30E6; NU=0.29
K=3157 for J1=-0.30424
```

CINT,TYPE,SIFS

Once the model has been solved, the Stress intensity factors can be listed in POST1 using the PRCINT command. Again, there is no need to identify the path used. ANSYS calculates the stress intensity factors for all of the nodes identified in the CINT,CTNC command. Partial results of PRCINT are shown in Figure 6.

```
***** POST1 K1           RESULT LISTING *****

 CrackID =   1

  Crack Front Node =    1
   Contour Values =    3153.1       3105.8       3104.3       3098.7
   Contour Values =    3091.5       3082.2

  Crack Front Node =   56
   Contour Values =    2944.4       3196.6       3192.7       3191.1
   Contour Values =    3190.0       3188.9
```

Figure 6: PRCINT,1,,K1 output results for the first 2 nodes shown

SUMMARY of Part 2

- Crack parameters including KI, KII, KIII are calculated using CINT and PRCINT commands

The APDL and geometry files are available here: ftp://ftp.padtinc.com/public/thefocus/Focus74_CINT_Files.zip

See section 12.3. Numerical Evaluation of Fracture Mechanics Parameters of the Structural Analysis Guide for a thorough discussion of all the possible crack options.

Banishing the Bad Geometry Blues with Design Modeler

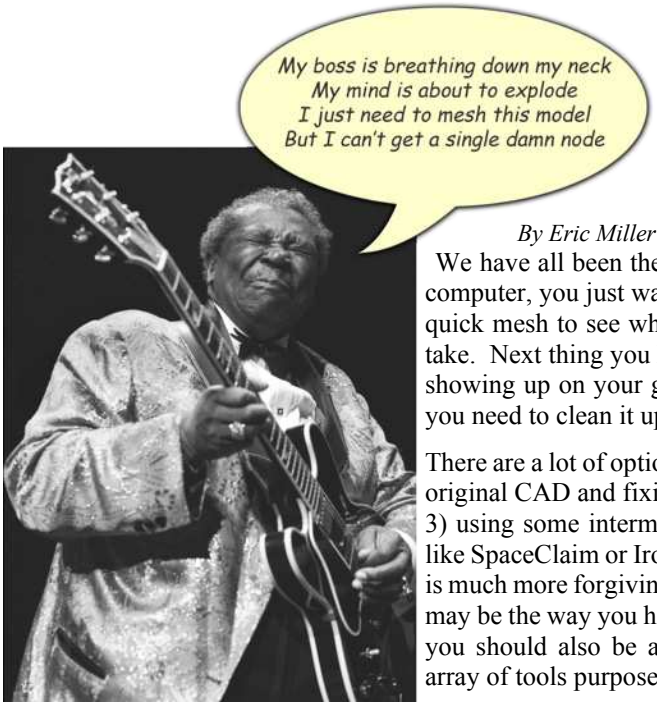

By Eric Miller

We have all been there before. You are poised in front of your computer, you just want to read in your geometry and throw on a quick mesh to see what you have and how much effort this will take. Next thing you know you are getting errors or red lines are showing up on your geometry. You got bad geometry and now you need to clean it up. You got them Bad Geometry Blues.

There are a lot of options available including: 1) going back to the original CAD and fixing that, 2) using a repair tool like CADFix, 3) using some intermediate geometry tool that is good at repair like SpaceClaim or IronCAD, or 4) meshing in ICEM CFD which is much more forgiving with bad geometry. All of these work and may be the way you have dealt with this situation in the past. But you should also be aware that ANSYS DesignModeler has an array of tools purpose build to help you solve this problem.

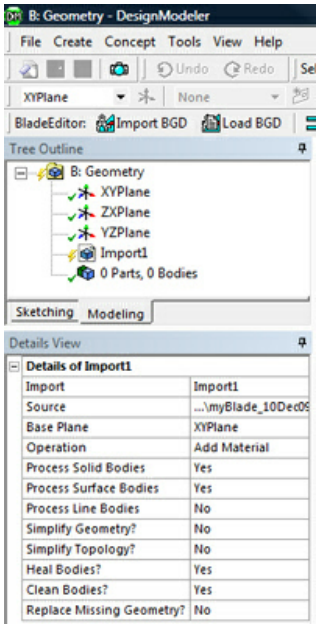

Figure 1: Import Options

The first thing to try are the options when you read your geometry in to DesignModeler. Figure 1 shows the appropriate details view. You can have the program simplify geometry, simplify topology, heal the body or clean the body. The program can also try and replace any missing geometry. By the way, the options available change based upon where your geometry came from so if you do not see all of them, that is normal. Heal geometry is on by default, as is clean. Sometimes you may not want them on. Play with simplifying as well. Sometimes modifying these options can clean everything up.

If the automatic stuff does not work, it is time to look at the tools available to you in DM. The first to look at is the "Small Entity Search." Just as the name implies, it goes out and identifies where you have small entities and gives you their size. You access the command a little differently in that it is not something you insert into the tree. Go to Tools > Analysis Tools > Small Entity Search. This will bring up the Details View shown in Figure 2. Pick one or more bodies you want checked and set the options, although the defaults are usually good. Then, this is the strange part, change the option next to "Go!" to "Yes" It will do the search and present the results down below. Click on any item listed and you will be able to see it on the screen. This should help you understand where you might have problems before you go in and start fixing things.

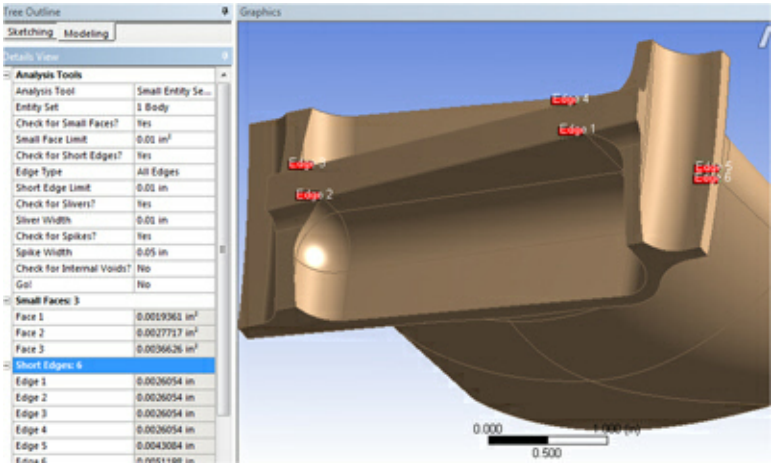

Figure 2: Small Entities

Our favorite repair tool in DM is the Merge tool. It takes edges or surfaces that are connected without any sharp corners and merges them into new smooth entities. Figure 3 shows a typical example for edges and Figure 4 shows the same for surfaces. You can do an automatic merge or pick entities that you want merged. The automatic is a great way to get rid of small slivers without having to hunt them down. This tool is also useful for simplifying your geometry in order to get a better mesh. Figure 5 shows how you can really clean up a fillet and the suction side of a turbine blade.

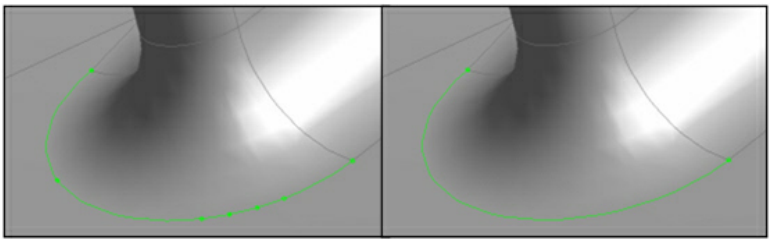

Figure 3: Merge Edges

Sometimes you just want to de-feature your model by deleting holes, fillets, bosses, etc… You can do most of that with the Edge and Face Delete commands. They can be found under Tools and they work as you would expect. You simply identify the *(Cont. on pg. 9)*

(Cont. on pg. 9)

(Bad Geometry, Cont...)

face or edge you want removed and the program takes it out and heals the solid. Figures 6 through 8 show examples. We find that this is the most efficient and controlled way to disfeature a model and get rid of tiny geometry that is causing issues.

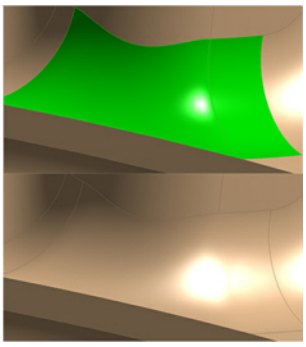

Figure 4: Merge Faces

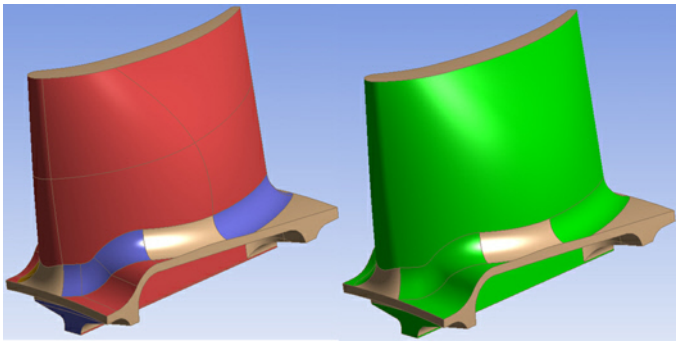

Figure 5: Merge Faces Cleanup

If, after using the tools mentioned above, you still have the bad geometry blues you can get down and dirty with a set of repair tools that address the most common issues. They can all be found under Tools-> Repair. The names are pretty self-explanatory. There are tools for removing slivers, spikes, small edges, small faces, seams, holes, and sharp angled surfaces. Most of them work the same way – you can specify a size and any features under that size get cleaned, or you can pick on geometry. The remaining figures show examples of the various options.

One small side note before we finish, most of the options available in the menu can be displayed as icons in the tool bars if you go to Tools->Options->Toolbars. If you are doing a lot of repairs, we recommend that you add the tools you are using to the toolbars. Another important thing that users should know is that you can repair geometry and save it as an ANSYS ANF file, the native file format for ANSYS Mechanical APDL. So even if you are not meshing or pre-processing in Workbench, you can still use this tool to clean up your geometry.

After spending years repairing bad geometry we are thrilled to have these tools in our main software product. Removing the need to jump out to other programs. Take the time to learn these tools, when they work and when they do not, and understanding their options has paid off in chasing away our bad geometry blues.

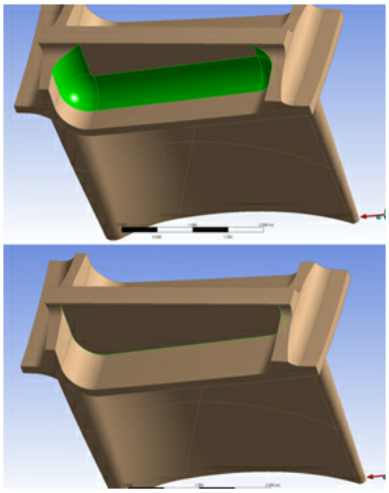

Figure 6: Delete Faces to Remove Fillets

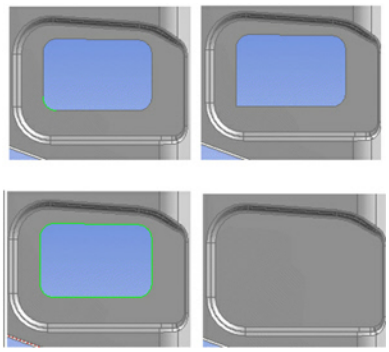

Figure 7: Remove Edges

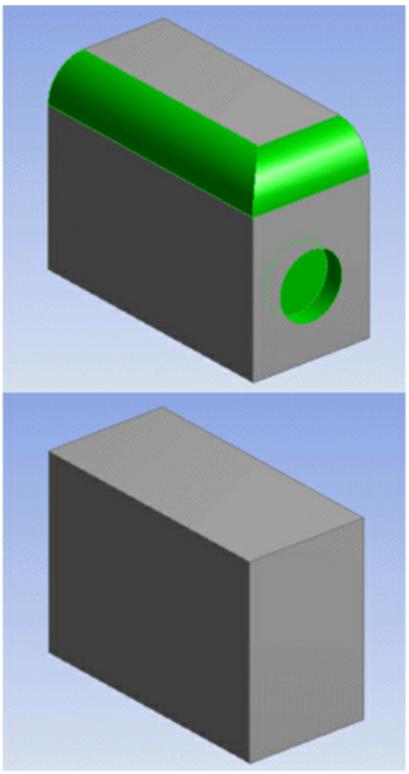

Figure 8: Remove Faces to Remove Features

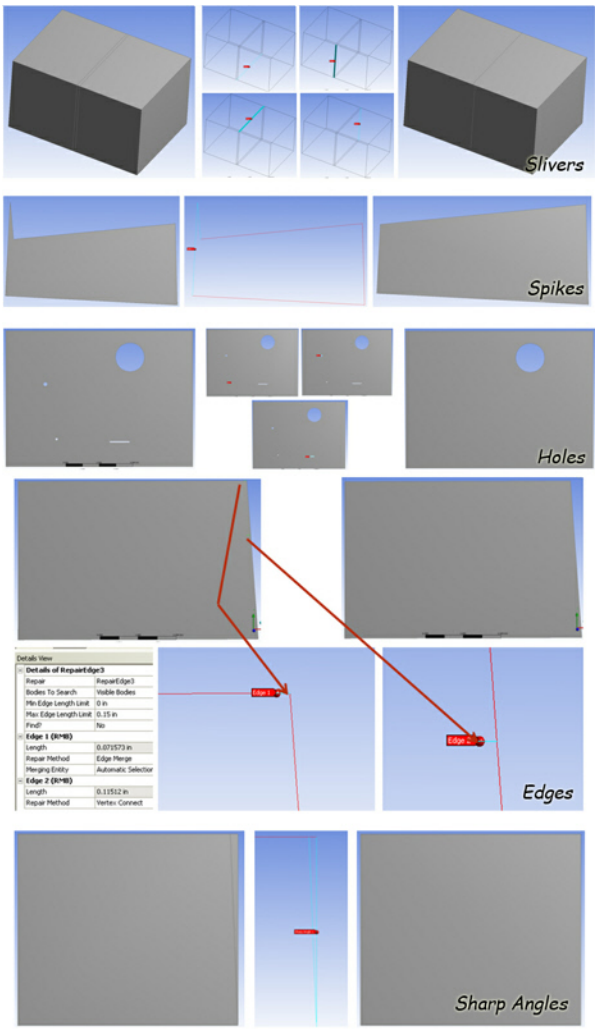

Figure 9: Repair Tools

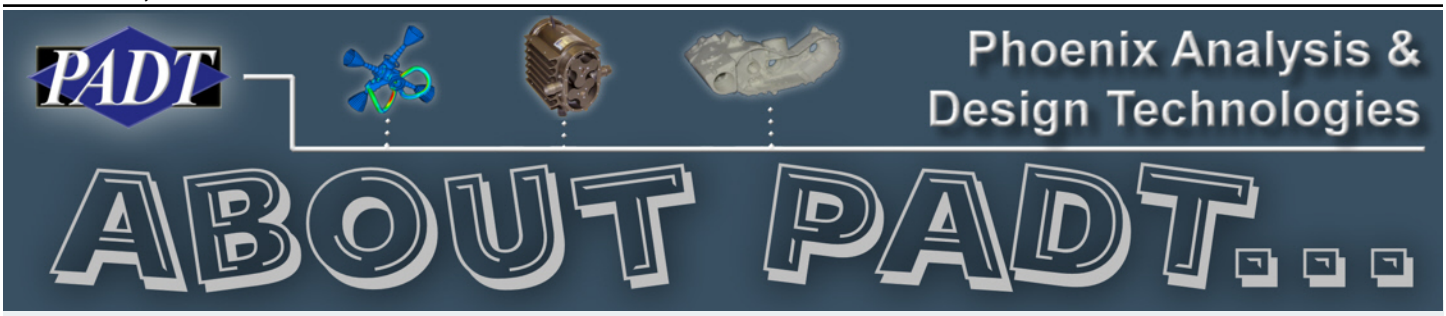

In the past we have finished up The Focus with a page we called "Shameless Advertising..." The truth was that the page was really only advertising PADT, and PADT related things. So, instead of doing advertising we thought we would just dedicate the final page to explaining who PADT is, what we do and how we can hopefully help you. And, to make sure you read it, we will try and stick something funny in. Want to know more? Call Stephen Hendry at 207-333-8780 or e-mail steve.hendry@padtinc.com.

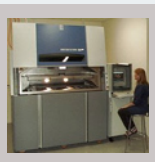

Rapid Prototyping

Did you know that PADT, Inc. is one of the most respected Rapid Prototyping service bureaus in the world? For 16 years, since the founding of the company, PADT's RP group has been providing high quality prototype parts to customers around the world. In that time the RP market has changed, and most small service bureaus have long since been gobbled up by larger firms or just plain gone out of business. But PADT has held our own by providing a high level of technical expertise and customer focus - similar to what has made the company a leader in the ANSYS world.

On site we have machines that use the three leading technologies: Photolithography, Fused Deposition Modeling, and Selective Laser Sintering. We also have a CNC mill and lathe, hand finishing tools, and a full paint booth so we can create that perfect part that customers expect. The same team also provides soft tooling (rubber molding) and injection molding for when you need to move beyond prototypes. Next time you need a prototype, please consider having PADT provide a quote.

Visit the rapid manufacturing part of our web site (www.padtinc.com/rm) or e-mail rp@padtinc.com to learn more.

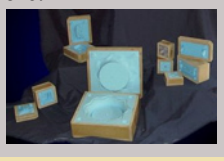

PADT on the Web

www.PADTINC.com	PADT's main website
www.PADTMedical.com	Medical device development
www.DimensionSCA.com	A machine that PADT makes
www.PADTMarket.com	A place to buy 3D Printers & Supplies
www.XANSYS.org	ANSYS User forum

Join us on Facebook!
Search for PADT, Inc. and become a fan!

Need ANSYS Help?

PADT can help in many different ways, here are a few:

- We hold training here or at your facility <link>
- Leverage our APDL knowledge with the APDL Guide <link>
- Consider one-on-one support through mentoring, a great way to get a quick start on something new <link>
- Attend a PADT Webinar <link>

Humor: Why the Chicken Crossed the Road... In the Words of the Star Wars Characters (www.maniacworld.com/star_wars_jokes/Star_Wars_Jokes.html)

VADER: Because it could not resist the power of the Dark Side.

YODA: Crossing the road makes not a chicken great.

LUKE: I want to follow the ways of the chicken and cross the road like my father.

LEIA: I don't know... but I have a bad feeling about this.

HAN: Hurry up, colonel sanders, or you're gonna be a permanent resident!

THREEPIO: I am fluent in over six million ways of crossing the road.

BEN: Cross the road, chicken. Let go, chicken. Chicken - trust me.

BIGGS: At that speed, will you be able to cross in time?

TARKIN: The regional governors now have direct control over their chickens. Fear will keep those chickens in line... fear of getting hit by a car!

ADMIRAL ACKBAR: All chickens - prepare to cross the road on my mark

LANDO: Why you slimy, no good, double-crossing chicken!! You got a lot of guts crossing that road, after what you pulled!

EMPEROR: Young fool. Only now, after getting hit by a car do you understand.

JABBA: Bo shuda chicken!