The Focus PADT

January 31, 2008 | A Publication for ANSYS Users | Issue 62

Using CAD Parameters within ANSYS

By Doug Oatis

As reported in previous articles, one strength of ANSYS Workbench is its ability to interface with multiple CAD systems, as well as read in many CAD-Neutral file formats. Not only does this help in dealing with bad translations and "dirty" geometry, it allows the user to pass dimensions between the CAD system and ANSYS.

Seeing as how ANSYS is CAD neutral, and can very easily interface with it, I was going to look for a picture showing the Borg with a

bunch of starships flying around getting "assimilated". However, I didn't want to give the impression that ANSYS was evil (both from a work productivity and my own personal job security point of view). So I decided on this picture (which I edited to say "What can you build?"), since it shows Borg as being a friendly contractor who's willing to help you build something no matter what tools are available (don't ask me about the cat…). Anyway, the first step to passing parameters into ANSYS is to set a

(Cont. on pg. 4

Using NLDIAG Diagnostics

By Ted Harris

How many times have you seen this frustrating message during a structural analysis solution?

If only we knew which elements were the ones causing the problems, we might have a better chance at fixing the problem. Fortunately the NLDIAG command in ANSYS allows us to obtain that information. Let's discuss how to use the NLDIAG command, which although is an ANSYS command can also be deployed in Workbench Simulation as well to help over-

(Cont. on pg. 5

```
*** ERROR ***                    CP =      19.109   TIME= 15:41:59
One or more elements have become highly distorted.  Excessive dis-
tortion of elements is usually a symptom indicating the need for cor-
rective action elsewhere.  Try incrementing the load more slowly
(increase the number of substeps or decrease the time step size).
You  may need to improve your mesh to obtain elements with better
aspect ratios.  Also consider the behavior of materials, contact pairs,
and/or constraint equations.  If this message appears in the first itera-
tion of first substep, be sure to perform element shape checking.
```

Hopefully my demonstration of maintaining this unstable equilibrium is more Interesting than a stress plot.

Table of Contents

Verifying Auto-Contact Generation

By Rod Scholl

How does it go? "With great power comes great responsibility"? This is the case with Workbench Simulation's automatic interface detection. After contact regions are detected, it is necessary to verify each connection to avoid what I will call "wrap-around areas" from being erroneously included in the contact region.

Case A:

This is a block dropped into a rectangular cutout as shown in Figures 1, 2, and 3. We only want contact at the bottom face as shown in Figure 3, and thus note that there is a single face in the contact pair as shown in Figure 4.

For a test case we'll slap on some BC's as shown in Figure 5, and look at equivalent stress as shown in Figure 6 and 7.

(Cont. on pg. 3

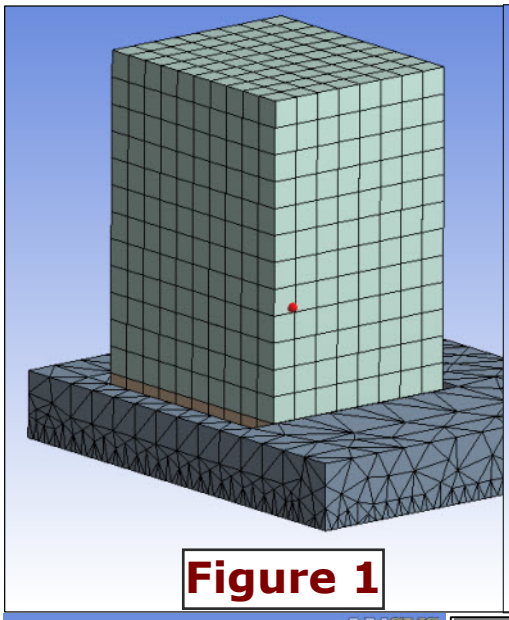

Figure 1

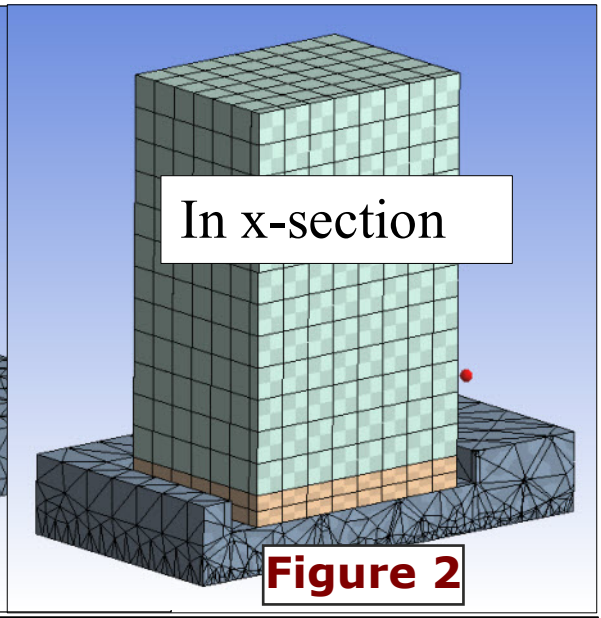

Figure 2

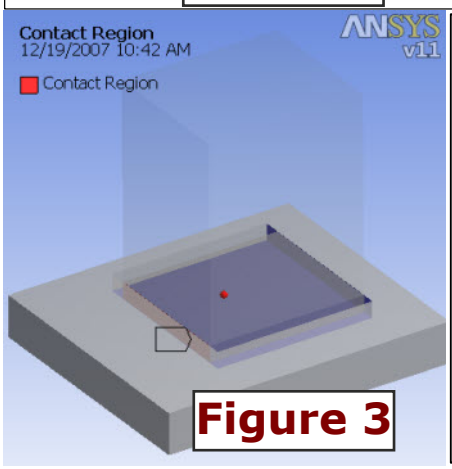

Figure 3

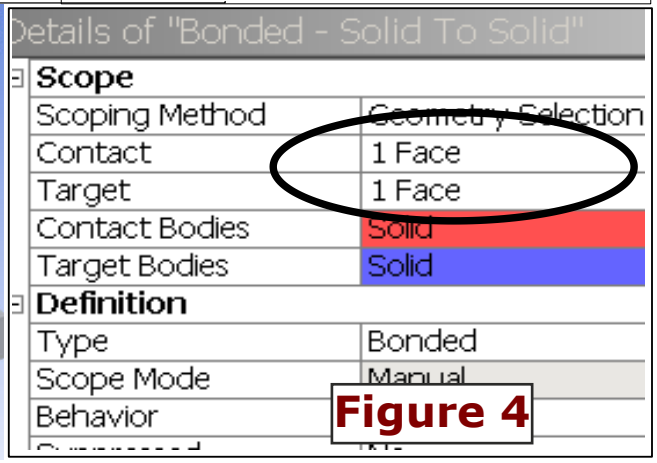

Figure 4

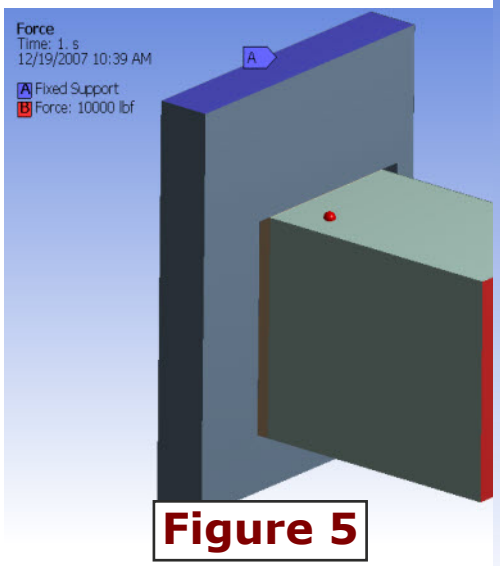

Figure 5

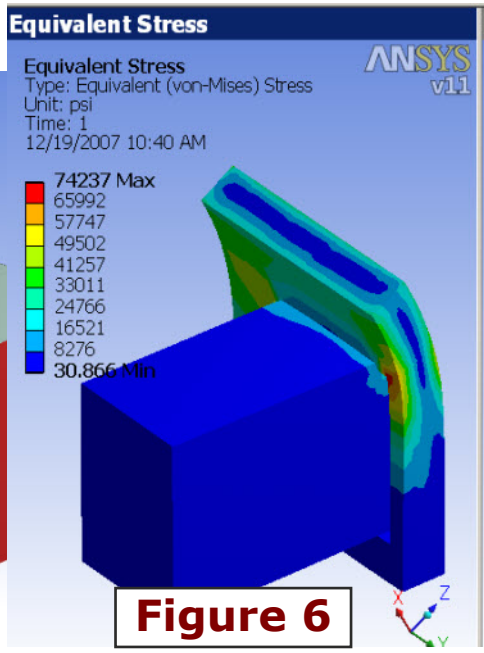

Figure 6

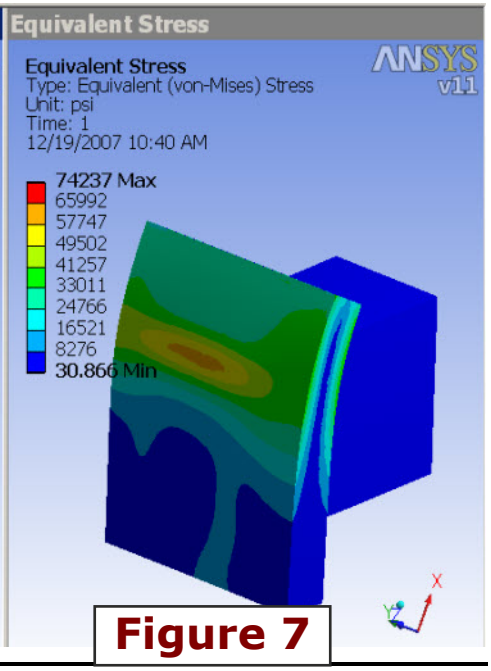

Figure 7

Case B: *(Auto-Contact, cont...)*

In this case, we let auto-contact find the interface. Here it grabs the surfaces on the side of the rectangular indent as shown in Figure 8 and we see there are 3 pairs of surfaces in Figure 9. Now we look at stresses under the same BC's and note in Figure 10 and 11 that they are 24% lower!:

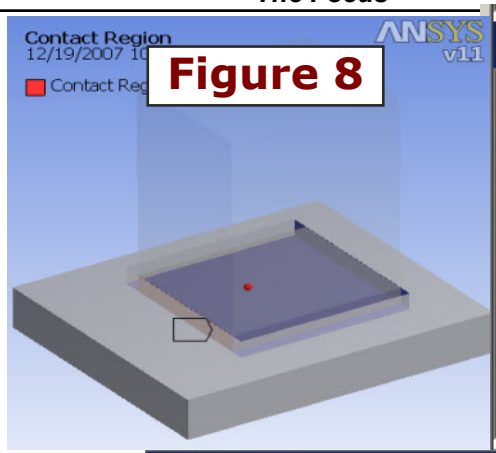

Figure 8

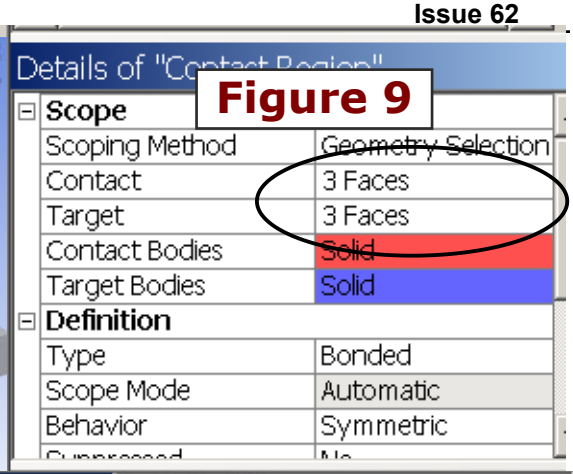

Figure 9

So clearly a large "wrap-around" contact surface can greatly alter your results, and one needs to check every interface and examine each of its involved faces.

This rectangular cutout in case A and B was pretty large, and thus the sizeable impact on results. I repeated the comparison in using a much more shallow contact region as shown in Figure 12 of the type which would be easy to overlook on an imported geometry. Here we see in Figures 13 and 14 that the stress on the front face decreases 11.8%, which is still appreciable.

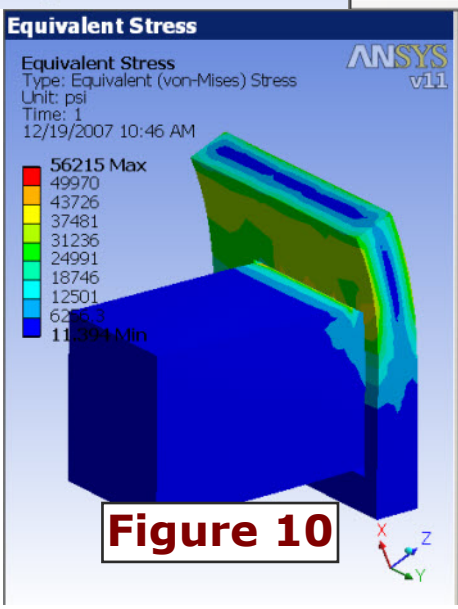

Figure 10

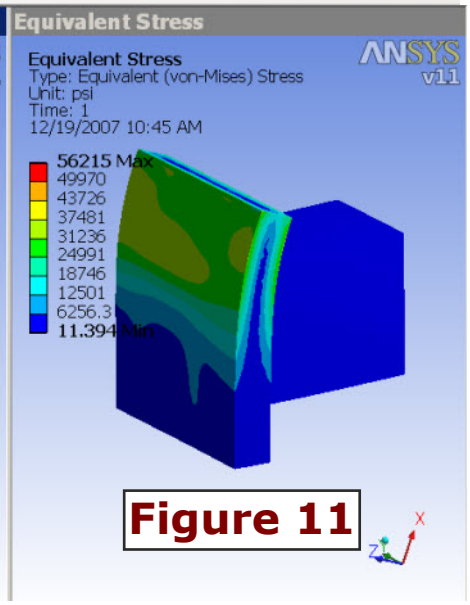

Figure 11

I should probably finish up with some finger wagging, pacing, and warnings about planes falling out of the sky… but instead I'll just say, "check your auto-created contact surfaces one by one not just visually but my number of surfaces in each region; it can impact the results dramatically…".

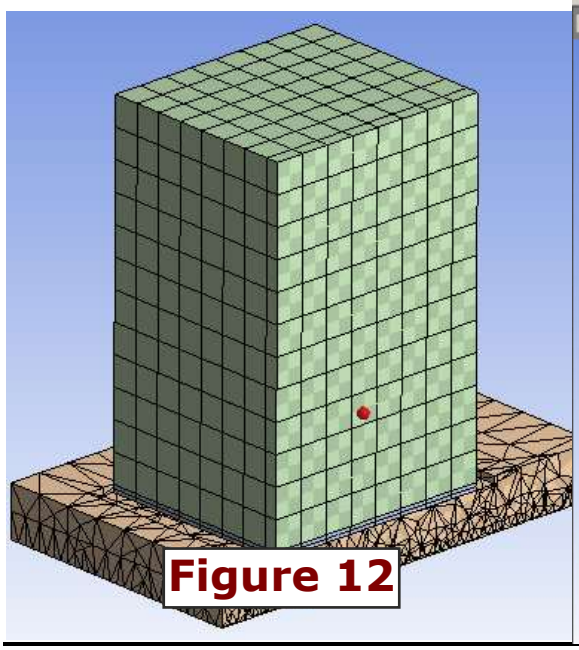
Figure 12

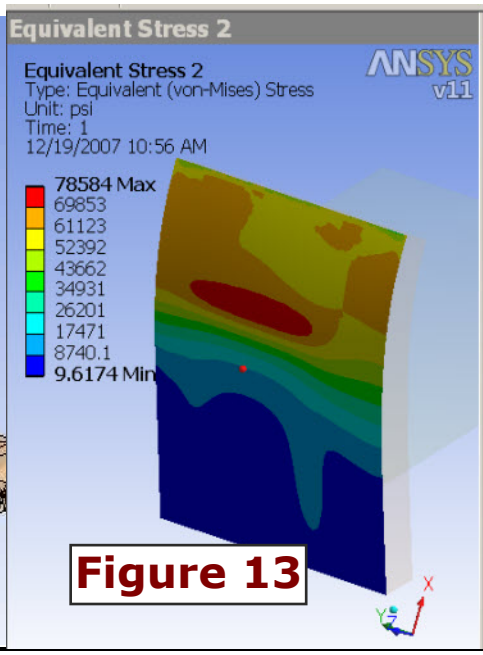

Figure 13

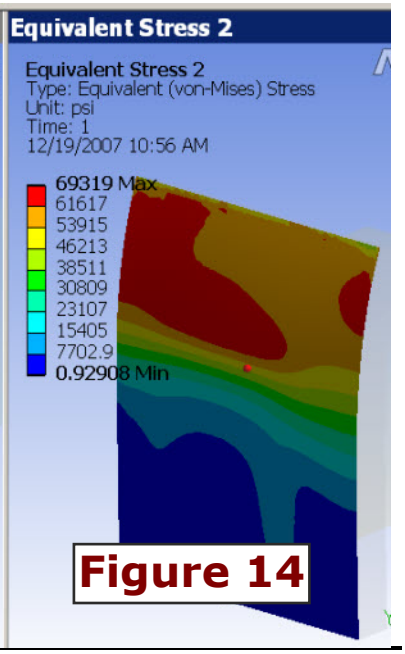

Figure 14

(CAD Parameters, cont...)

prefix name. By default ANSYS looks for any dimension who's name begins with 'DS'. You can see this preset in multiple places; the Project Page "Default Geometry Option", Design Modeler "Details of Attach", and Simulation "Details

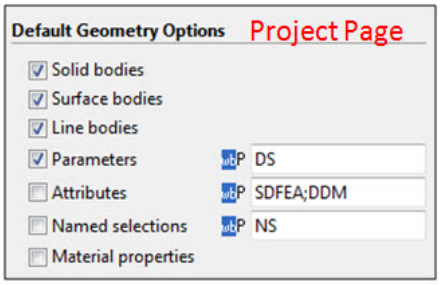

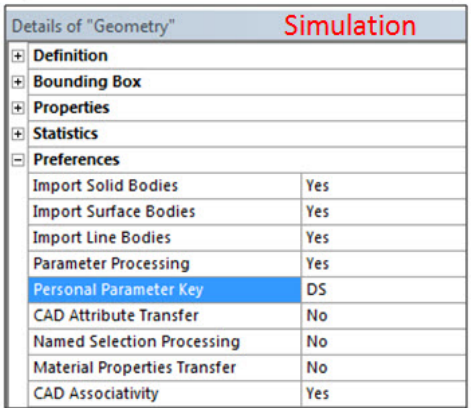

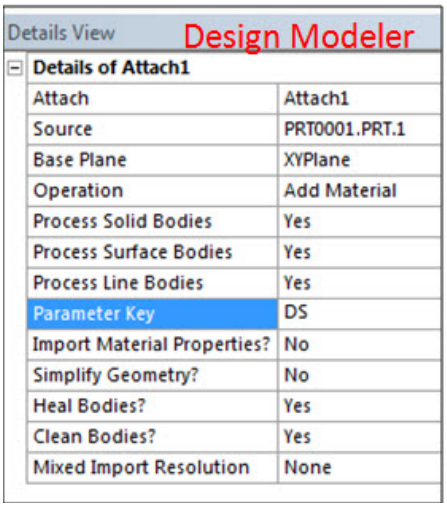

of Geometry". If you set the key to be blank, then it will import EVERY dimension in your model. This might be okay for a small model, but if you're a hot-shot analyst like me, you're working with assemblies of parts that have hundreds of features (all of which have some dimension driving them).

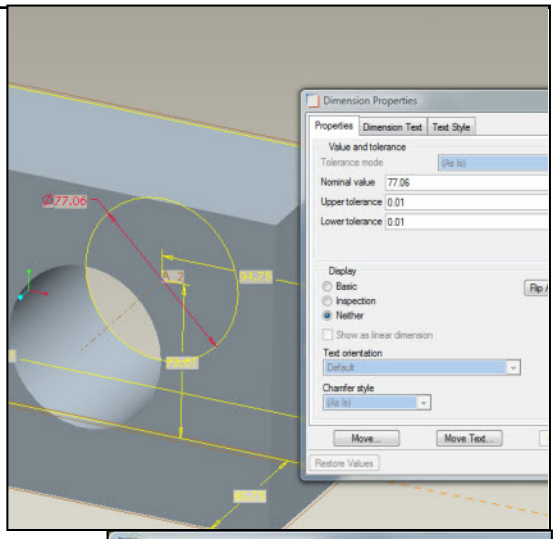

So now we need to go into our CAD system (Pro/E is shown right) and modify the name of a dimension to include the DS prefix. As shown, while editing a feature, I right clicked on a dimension and brought up the 'Properties' window. One of the tabs is "Dimension Text", which contains the default name. Simply add the 'DS' prefix in there and you're ready to go.

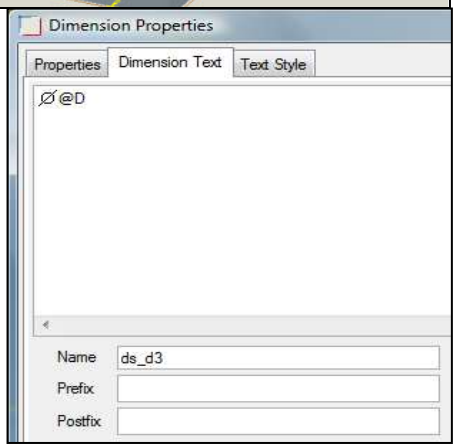

Next, launch ANSYS as you normally would through the provided drop-down 'ANSYS' menu. When you've finished importing the geometry you should see your dimension listed in the details widow. For Design Modeler, the dimension will appear in the details on the 'Attach' object in the tree. For Simulation, the dimension will appear in the details window for the part the dimension is attached to (see pictures to the right).

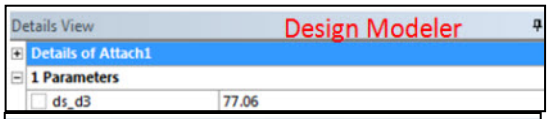

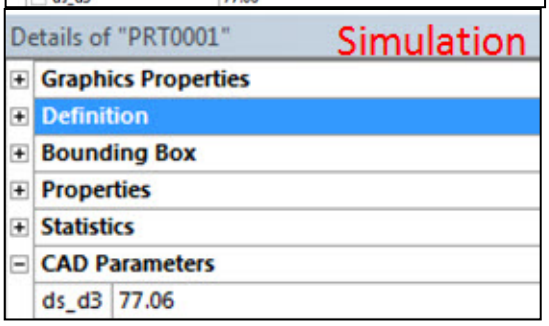

Now after you've been doing this a while, you may notice that if you bring the dimension into DM, it isn't carried over into Simulation. That's because the dimension is only a local parameter, and isn't carried over into subsequent modules. You can promote this dimension by "parameterizing" it (click the empty box next to the dimension name), thereby promoting it to a global value. You will then be able to see it in the parameter manager in Simulation.

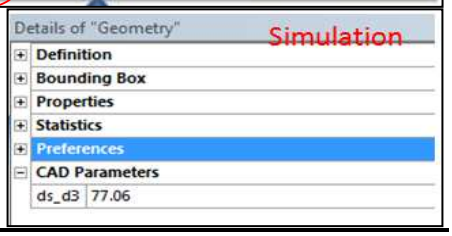

(CAD Parameters, cont...)

At this point you're really ready to rock and roll. If you want to change the dimension, simply enter in the new value in the details window. Next refresh the geometry with either the DesignModeler or Simulation Parameter values (depending on which module you're in). When ANSYS refreshes, it will go back to the CAD system, pass the new dimension, wait for the CAD to regenerate the model, re-import, and then perform all preprocessor operations you did on it in DM or Simualtion. If the regeneration causes large topology changes, then you may need to redo some setup work (but this isn't a very common occurance). If you want to pull in the dimensions from your CAD model, then tell it to use the 'Geometry' parameter values. This way you can drive the analysis from both sides, CAD and ANSYS. Once you get comfortable with this, you can use rapper Xzibit's favorite Workbench Module, DesignXplorer. DX (as it's known on the street) allows for easy setup of parametric design studies, as long as you have at least one input and one output parameter.

If you don't have a DX license, you can only do manual DOE runs, where you are responsible for creating all the design points. If you have a DX license, then get ready to pimp your analysis. DX offers many parametric study types and sampling routines, which allow you to specify distributions of inputs and automatically create the required number of design points. This allows you to really look into how sensitive your part is to various geometric tolerances.

So for all you analysts out there keepin it street (alright, I'm done with hip hop references), remember you can truly simplify your life and shorten your analysis cycle by using CAD parameters. All that's required is the proper license, and a supported CAD package (SolidWorks, Pro/E, SolidEdge, Catia V5, etc.).

For the rest of you wondering what I've been talking about, just watch MTV's Pimp My Ride (check your local cable provider for availability and listings).

Word.

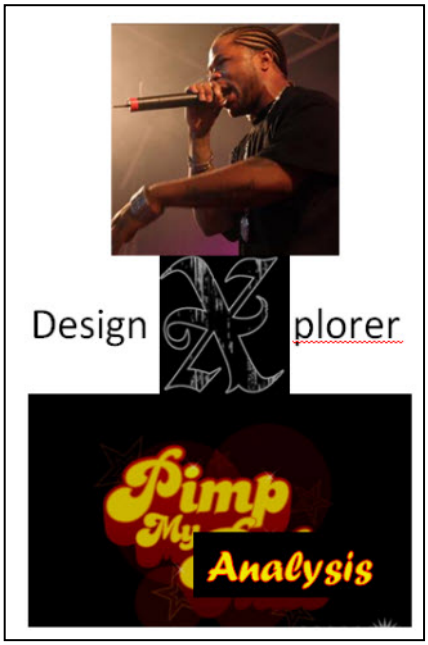

(NLDIAG, cont...)

come convergence difficulties in nonlinear structural analyses.

Both ANSYS and Workbench Simulation allow us to plot the Newton-Raphson residuals. These plots are color contours of the imbalance in the system for a given equilibrium iteration. The locations of highest residuals show where the imbalance is greatest in the model. The use of the NLDIAG command to create these plots in ANSYS was discussed in a previous Focus article. You may find this other article useful in understanding the Newton-Raphson nonlinear solution method.

The rest of this article will discuss the additional capability of NLDIAG besides plotting Newton-Raphson residuals. Before we move on, however, note that those residuals can be plotted in Workbench Simulation 11.0 by highlighting the Solution Information branch and changing the Details of Newton-Raphson Residuals to a number greater than 0.

The NLDIAG command can be used to produce additional nonlinear diagnostic information such as which elements have triggered a bisection or nonconvergence due to

1. Excessive distortion
2. Exceeding the allowable plastic strain for a substep
3. Exceeding the allowable creep strain for a substep
4. Having nodes with near-zero pivots
5. Having violated the Mixed U-P constraints (18X elements)

In addition to telling us the elements which have encountered the above problems, the load step, substep, and cumulative iteration at which the problems occurred are stored as well.

NLDIAG can also be used to store contact diagnostic information for each contact element during solu-

(NLDIAG, cont...)

tion. The type of information stored can be the number of elements in contact, the maximum penetration, the maximum contact stress, etc. More details on the information available for contact elements is available in the ANSYS Help for the NLDIAG command. NLDIAG produces no data unless we turn it on either through issuing the command with the appropriate options or by activating it in the ANSYS environment menu. The trick is that you have to activate it **before** you have difficulty, so it's not a bad idea to activate it on your first attempt at solving.

The command format to have it track element events as described above is shown below:

```
NLDIAG,EFLG,1
!write diagnostic files
```

Also, by default only information for the most recent four equilibrium iterations is stored. If we want to be able to keep track of events which may have occurred earlier in the solution we need to increase the number of files stored with the MAXF option of NLDIAG, such as the following:

```
NLDIAG, MAXF, 200
!Store 200 files max
```

This can also be accomplished from the ANSYS user interface, by clicking on Solution > Diagnostics > Nonlinear Diagnostics. The number of previous iterations to save can then be increased from the default of 4, shown to the right.

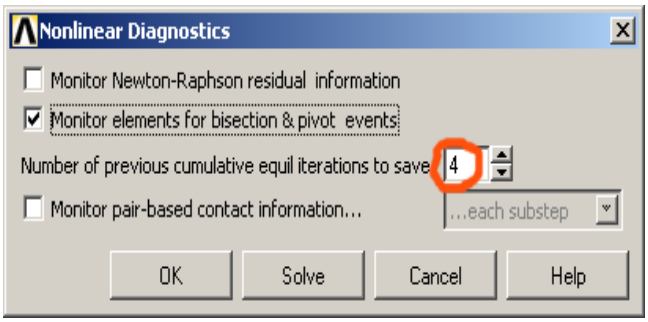

If we want to use NLDIAG to track element convergence problems within ANSYS Workbench Simulation, we need to insert a command snippet under the Solution branch using those commands.

```
NLDIAG,MAXF,200
NLDIAG,EFLG,1
```

For example,

As the solution progresses, nonlinear diagnostic information will be written to files with the naming convention <jobname>.nd001, .nd002, etc. The content of the files will look like the example shown below.

```
/COM,ANSYS RELEASE 11.0SP1
 test110sp1.nd012
     1     2     1    13     0   420
     1     0     0     0     0     0
     2     0     0     0     0     0
     3     0     0     0     0     0
     4     0     0     0     0     0
     5     0     0     0     0     0
     6     0     0     0     0     0
     7     0     0     0     0     0

.......snip.......

   372     0     0     0     0     0
   373     0     0     0     0     0
   374     0     1     0     0     0
   375     0     0     0     0     0
   376     0     0     0     0     0
   377     0     0     0     0     0
```

The first line that starts with "1" indicates that this file is for substep 2, load step 1, cumulative iteration 13, and that there are 420 elements in the model. The 1 in field 3 in the line that starts with 374 indicates that element 374 had excessive element distortion for this equilibrium iteration.

Fortunately, there is an easier and better way to review the content of these files than to hunt for "1"s in a sea of zeroes in a text editor. The ANSYS /POST1 General Postprocessor has a nice tool for coalescing the information in the nonlinear diagnostic files into something we can quickly and easily use. To do that, we activate the ANSYS interface in the working directory in which our diagnostic files reside, making sure our jobname matches our diagnostic file name prefixes (this will be "file" if using Workbench Simulation).

(NLDIAG, cont...)

Next we click on General Post-processor > Read Results > Last Set and then click on Nonlinear Diagnostics.
In the image to the right the highlighted row shows that at time 0.3, load step 1, substep 2, cumulative iteration 13 there was an element that exceeded the allowable amount of distortion.

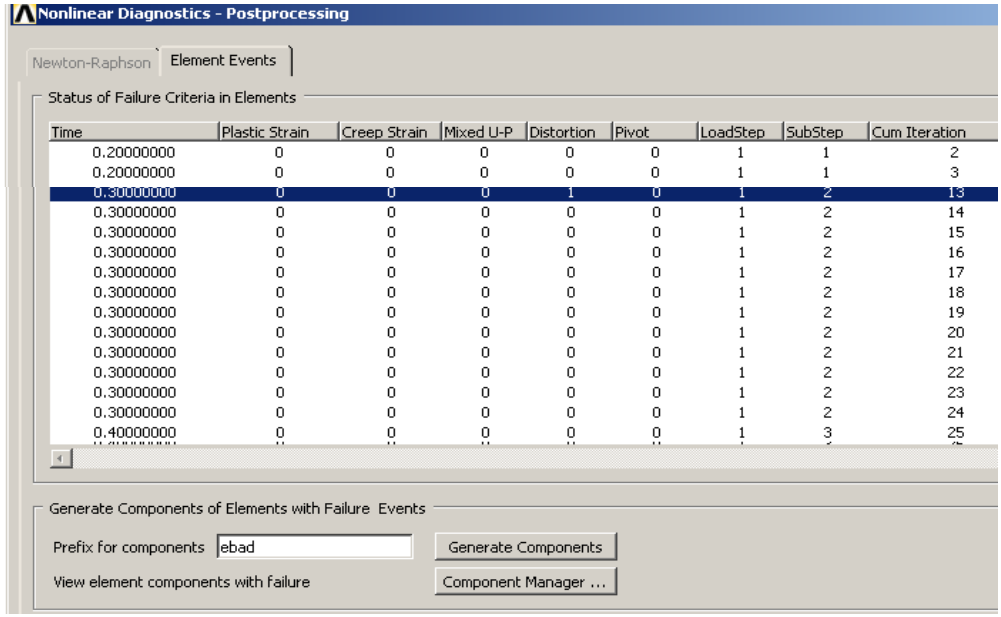

Time	Plastic Strain	Creep Strain	Mixed U-P	Distortion	Pivot	LoadStep	SubStep	Cum Iteration
0.20000000	0	0	0	0	0	1	1	2
0.20000000	0	0	0	0	0	1	1	3
0.30000000	0	0	0	1	0	1	2	13
0.30000000	0	0	0	0	0	1	2	14
0.30000000	0	0	0	0	0	1	2	15
0.30000000	0	0	0	0	0	1	2	16
0.30000000	0	0	0	0	0	1	2	17
0.30000000	0	0	0	0	0	1	2	18
0.30000000	0	0	0	0	0	1	2	19
0.30000000	0	0	0	0	0	1	2	20
0.30000000	0	0	0	0	0	1	2	21
0.30000000	0	0	0	0	0	1	2	22
0.30000000	0	0	0	0	0	1	2	23
0.30000000	0	0	0	0	0	1	2	24
0.40000000	0	0	0	0	0	1	3	25

At the bottom of the above menu screen we can type in a name for an ANSYS element component and then click on the Generate Components button. That will create a named group of elements that we can then select and plot or otherwise investigate. Plotting the element which has undergone too much distortion may show us that it was poorly shaped to begin with or that it was improperly constrained, etc. Hopefully this is information that will help us to take corrective action to allow our solution to converge for the full load. The element component names will use the prefix we specify followed by a special naming convention depending on what type of problem the elements encountered. This naming convention is described in the documentation for the NLDIAG command in the ANSYS help.

So the NLDIAG command gives us one more tool in our belt to help us overcome structural convergence difficulties. The capability is available in Workbench Simulation by inserting the appropriate NLDIAG commands under the Solution branch, but the post-processing of the NLDIAG,EFLG data for element convergence troubles is best performed in the ANSYS General Postprocessor, as of version 11.0.

News - Links - Info

- One set of FLUENT tools that PADT is getting very excited about and seeing a lot of interest in for resources electronics people, are the ICEPak packages. Visit www.icepak.com to learn more.
- Did you know PADT has extensive capabilities in Rapid Prototyping? Learn more!
- Visit PADT"s SWAU Resource Center. These tools, and publications are designed for our customers in the southwest, but will be useful to all ANSYS users.
- View the collection of undocumented ANSYS commands.
- Design your new computer (or justify the a purchase) using PADT's benchmark site.

Upcoming Training Classes

Month	Start	End	#	Title	Location
Feb '08	2/4	2/5	107	ANSYS WB DesignModeler	Tempe, AZ
	2/6	2/6	411	WB Simulation Electromagnetics	Tempe, AZ
	2/7	2/8	205	WB Simulation Dynamics	Tempe, AZ
	2/21	2/21	206	WB Rigid & Flexible Dynamics	Tempe, AZ
	2/25	2/26	202	Advanced Structural NL	Tempe, AZ
Mar '08	3/3	3/4	104	ANSYS WB Simulation – Intro	Tempe, AZ
	3/5	3/6	207	WB – Structural Nonlinearities	Tempe, AZ
	3/10	3/11	203	Dynamics	Tempe, AZ
	3/17	3/18	501	ANSYS/LS-DYNA	Tempe, AZ
	3/26	3/28	902	Multiphysics Simulation for MEMS	Tempe, AZ
Apr '08	4/2	4/4	101	Introduction to ANSYS, Part I	Tempe, AZ
	4/7	4/8	107	ANSYS WB DesignModeler	Tempe, AZ
	4/9	4/11	401	Low Frequency Electromagnetics	Tempe, AZ
	4/14	4/15	604	Introduction to CFX	Tempe, AZ
	4/21	4/22	201	Basic Structural Nonlinearities	Tempe, AZ
	4/23	4/24	204	Advanced Contact and Fasteners	Tempe, AZ

The Shameless Advertising Page

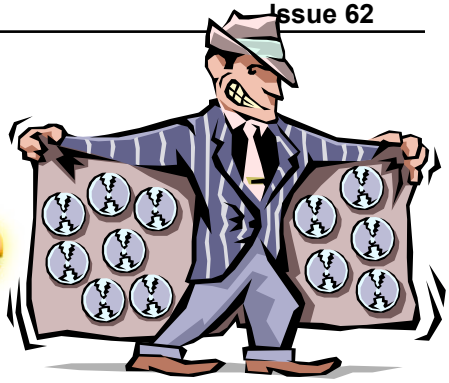

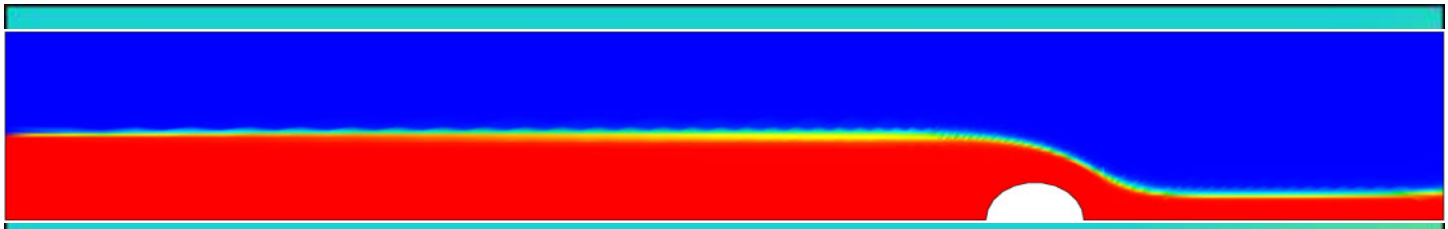

GOT CFD?

Whether you feel you need to start implementing CFD into your engineering analysis or you are looking for increased compute power, PADT, Inc. can assist you! We use two of the best and most comprehensive CFD tools available, FLUENT and CFX, which are unmatched in their breadth and depth of capability when solving the toughest or even the simplest CFD problems.

PADT, Inc. has CFD engineers with over 15 years of experience using FLUENT, CFX and a host of other CFD codes. This experience enables us to quickly assess an application, understand the challenges and provide you with timely, accurate and detailed results. Give us a call or send us an email if you:

- **Want to bring CFD into your engineering design and analysis and don't currently have the expertise?**
- **Don't have the compute power to solve larger CFD problems?**
- **Have purchased CFX or FLUENT and want some help, such as mentoring or services to get up to speed more quickly?**
- **Need a CFD job done now!?**
- **Or just need additional CFD resources...**

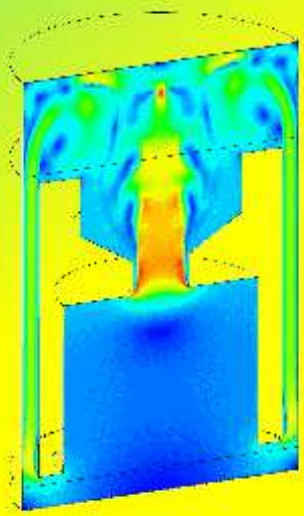

To speak with someone about your CFD and other engineering needs, please contact Stephen Hendry, visit us online, or call 1-800-293-PADT (7238).